Engine, General Information
VNL
Section 2

General Information

This information provides details concerning engines available for Volvo vehicles.

Note: We have attempted to cover as much information as possible. However, this information does not cover all the unique variations that a vehicle may present. Note that illustrations are typical but may not reflect all the variations of assembly.

All data provided is based on information that was current at time of release. However, **this information is subject to change without notice**.

Please note that no part of this information may be reproduced, stored, or transmitted by any means without the express written permission of Volvo Trucks North America.

Contents:

- “Engine Operation”, page 2
- “Engine Overview, D13”, page 4
- “Exhaust Emissions and Aftertreatment Diesel Particulate Filters (DPF)”, page 6
- “DPF Systems and Temperatures”, page 12
- “Diesel Exhaust Fluid (DEF)”, page 16
- “Aftertreatment Control Module (ACM)”, page 17
- “Fuel heating option”, page 18
- “NOx Sensor”, page 20
- “Engine Overspeed”, page 21
- “Fittings, Fuel Line, Replacement”, page 22

All Rights Reserved

Engine Operation

DANGER

Risk of serious personal injury
Do not use ether or other combustible starting aids in any Volvo engine. Introduction of ether or similar starting aids could cause a fire or explosion resulting in severe property damage, serious personal injury or death.

CAUTION

Risk of component damage
DO NOT crank the engine for more than 30 seconds at a time. Wait two minutes after each try to allow the starter to cool. Failure to follow these instructions could cause damage to the starter.

Note: Some starters are equipped with starter protection. If the engine is running, the starter temperature is too high, the transmission is not in neutral or the clutch pedal is not pressed, starter engagement is inhibited.

Allow the engine to slow down and idle for three to five minutes before shutting it off. This allows the turbocharger to cool down and the cooling system to dissipate the engine heat. Switch the engine off by turning the ignition key to the OFF position.

CAUTION

Risk of component damage
Shutting off an engine immediately after high speed or full load operation can damage the turbocharger and cause heat stress in the engine. Always let the engine idle for three to five minutes before shutting it off.

Volvo Trucks North America does not recommend the use of winterfronts, shutters or any other shield in front of the grille or radiator package under normal circumstances. Today's electronically controlled engines are designed to operate in cold temperatures without a winterfront. These devices, if not used properly, can cause higher exhaust gas temperatures, power loss, excessive fan usage, failure of the Charge Air Cooler (CAC) and a reduction in fuel economy. Winterfronts can be used in the wintertime during very cold weather if used properly. In these cases, engine coolant and intake air temperatures must also be carefully monitored and controlled. Contact your authorized Volvo truck dealer for recommended winterfronts.

CAUTION

Risk of component damage
Volvo is now using the Ambient Air Temperature (AAT) sensor for On-Board Diagnostic (OBD) monitoring. If a customer installs a winterfront or blocks the radiator opening and blocks airflow to the sensor, they will likely set an OBD Diagnostic Trouble Code (DTC) for inaccurate sensor data due to restricted airflow across the sensor.

All Rights Reserved

⚠ DANGER

Failure to take the necessary precautions when the stop tell-tale is ON can result in automatic engine shutdown and the loss of power steering. Vehicle crashes can occur.

The engine shutdown system will automatically derate or stop the engine when one or more of the conditions listed below reaches a critical stage:

- High engine coolant temperature (ECT)
- Low engine oil pressure (EOP)
- Low engine coolant level (ECL)
- High crankcase pressure (CCP)
- High engine oil temperature
- Low engine oil level
- Engine overspeed (high)
- Low fuel filter pressure
- High boost pressure and temperature (available for turbocharger with wastegate)
- High exhaust temperature
- High EGR (Exhaust Gas Recirculation) cooler temperature
- High DPF (Diesel Particulate Filter) soot load

When the shutdown is activated, the tell-tales come on along with display symbols and the buzzer is also activated. After a brief time, the engine shuts down. Find a safe place to pull off the road as soon as possible.

After the engine is shut down by the system, turn the ignition key to the OFF position. If necessary, the engine can be re-started for a brief time so that the vehicle may be pulled off the road.

The alarm will remain activated until repairs are made to correct the problem that caused the shutdown.

⚠ CAUTION

Risk of engine damage
Continuously restarting the engine once the shutdown system is active may result in severe engine damage.

Refer to the Driver Information Display manual for information about the display symbols.



W3005171

All Rights Reserved

Engine Overview, D13

Left Side View

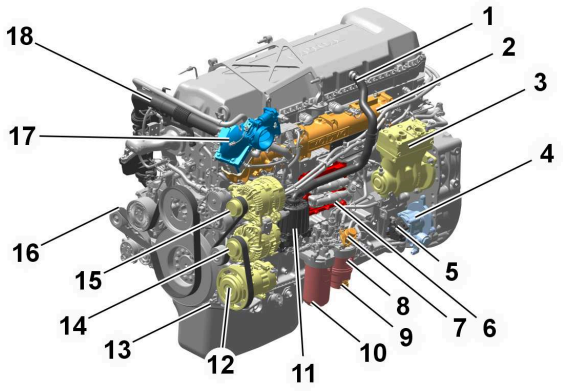

T2215997

D13 Engine Shown

1. Breather tube	10. Fuel filter
2. Intake manifold	11. Crankcase ventilator
3. Air compressor	12. AC compressor
4. Power steering pump	13. Alternator/AC compressor belt
5. Fuel pump	14. 24 V Alternator
6. Engine Control Module (ECM)	15. 48 V Alternator[1]
7. Hand-priming pump	16. EGR mixing chamber
8. Fuel filter	17. Fan/Coolant pump belt
9. Fuel/Water separator	18. EGR cross-over pipe

1 Applicable only for CARB24 vehicles

All Rights Reserved

Right Side View

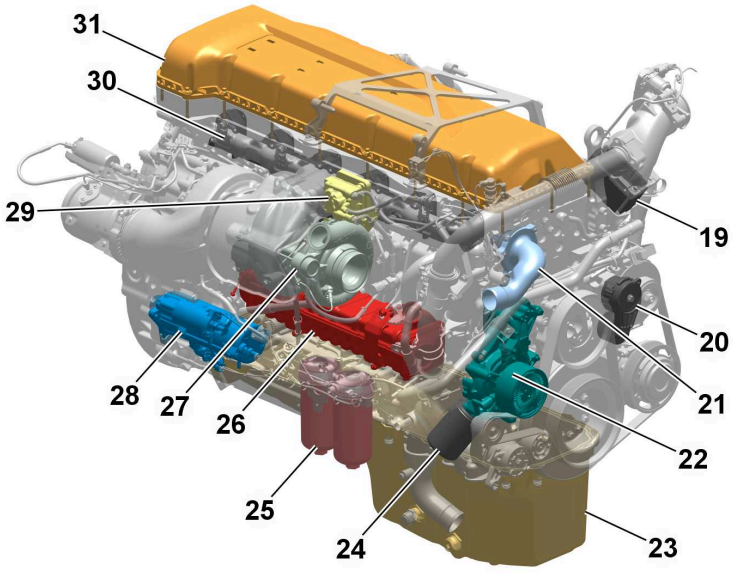

T2216001

D13 Engine Shown

19. Intake Air Heater (IAH)	26. EGR cooler
20. Belt tensioner	27. Turbocharger
21. Thermostat	28. Starter motor
22. Coolant pump	29. EGR valve
23. Oil pan	30. Exhaust manifold
24. Coolant filter	31. Valve cover
25. Oil filter housing	

All Rights Reserved

Exhaust Emissions and Aftertreatment Diesel Particulate Filters (DPF)

General

USA

Emissions Control Compliance: The Federal Clean Air Act, Section 203 (a) (3), states the following concerning the removal of air pollution control devices or modification of a certified engine to a non-certified configuration:

The following acts and the causing there of are prohibited:

For any person to remove or render inoperative any device or element of design installed on or in a motor vehicle or motor vehicle engine in compliance with regulations under this part prior to its sale and delivery to the ultimate purchaser, or for any manufacturer or dealer knowingly to remove or render inoperative any such design after sale and delivery to the ultimate purchaser.

Specifically, please note that no person may make such changes prior to the sale and delivery of the vehicle to the ultimate purchaser, and, in addition, no manufacturer or dealer may make take such action after sale and delivery of the vehicle to the ultimate purchaser. CARB enforces against individual vehicle owners (consumers) that have violated the law by tampering, modifying, or installing illegal parts on emission-controlled vehicles operated on a public highway. Violations of these requirements are subject to penalties up to $37,500 per violation.

Tampering with a DEF system is illegal in the U.S., It may also void the manufacturer's warranty. Ultimately, the dealer cannot accept the trade-in since it is non-compliant.

Modifications, such as reprogramming of the fuel system so the engine will exceed the certified horsepower or torque, or removing the mufflers are examples of illegal changes.

Changes must not be made to a certified engine that would result in an engine that does not match the configuration of an engine model that is currently certified to meet Federal Standards.

Mexico

The same conditions that apply in the USA apply to Mexico. Refer to the Mexican Federal Law for Emission Control which adheres to EPA regulations. No changes must be made that render any or all of the emissions control devices inoperative. If the owner/operator wishes to make changes to the emission control devices, check with the state authority before changes are made.

Canada

The same conditions that apply in the USA apply to Canada, with one exception. After the vehicle is sold to a retail customer, that is, the end user, the jurisdiction controlling the emission control devices becomes the province in which the vehicle is licensed. No changes must be made that render any or all of the devices inoperative.

If the owner/operator wish to make any changes to the emission control devices, they must check with the provincial authority before making any such changes.

Notes

All Rights Reserved

Exhaust Emissions and Aftertreatment DPF with Horizontal SCR Catalyst

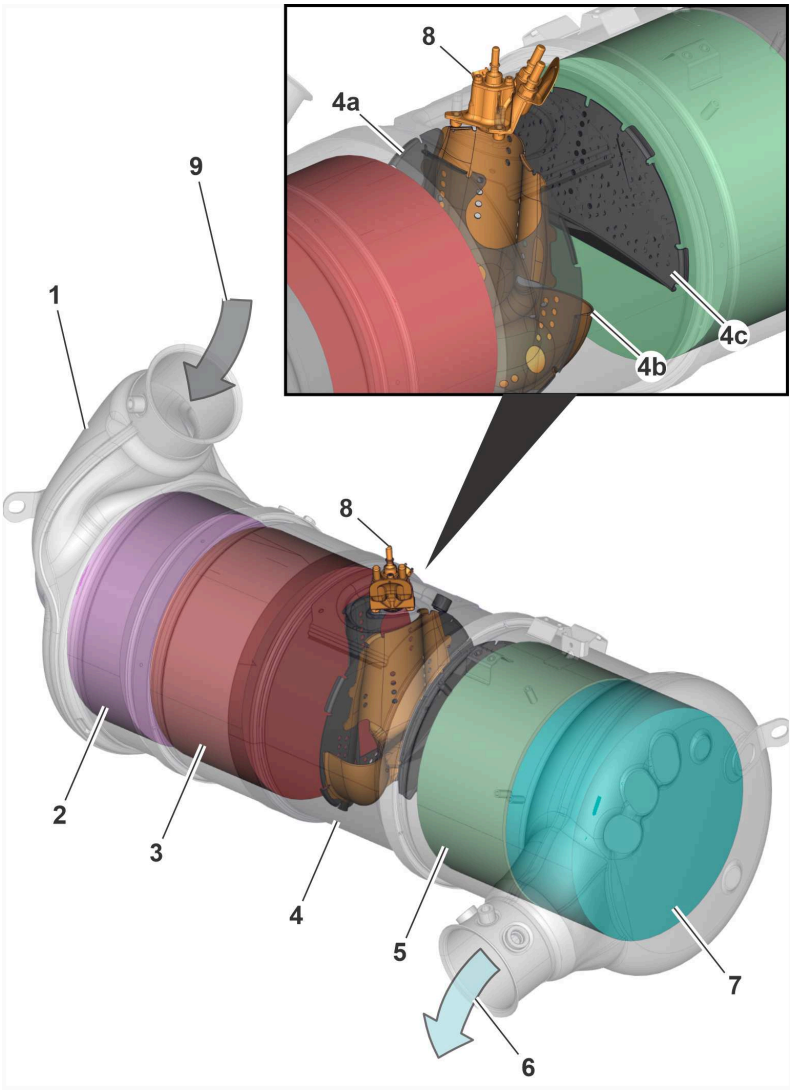

T2197924

1. Silencer
2. Aftertreatment Diesel Oxidation Catalyst (DOC)
3. Aftertreatment Diesel Particulate Filter (DPF)
4. Reagent (Diesel Exhaust Fluid) mixing chamber

4a. Perforated plate

4b. Reagent (Diesel Exhaust Fluid) mixing chamber plate (rear)

4c. Reagent (Diesel Exhaust Fluid) mixing chamber plate (front)

5. Selective Catalytic Reduction (SCR)
6. Exhaust outlet
7. Ammonia Slip Catalyst (ASC)
8. Reagent (Diesel Exhaust Fluid) dosage valve
9. Exhaust inlet

All Rights Reserved

Exhaust Emissions and Aftertreatment DPF with Horizontal SCR Catalyst

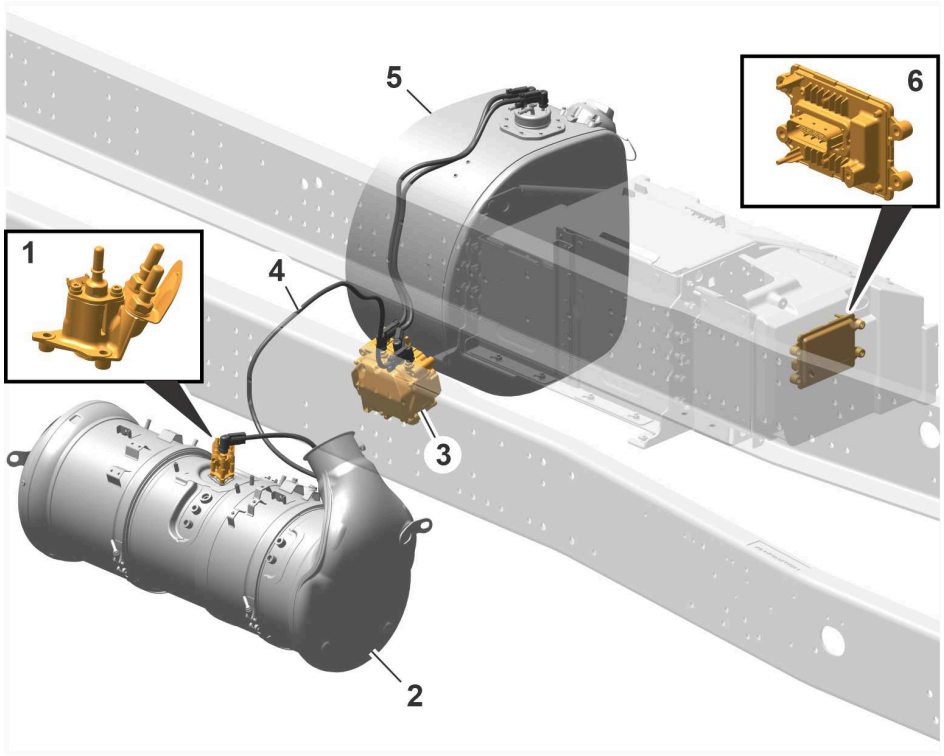

T2197925

1. Reagent (Diesel Exhaust Fluid) dosage valve
2. Silencer
3. Reagent (Diesel Exhaust Fluid) pump unit
4. Reagent (Diesel Exhaust Fluid) line
5. Reagent (Diesel Exhaust Fluid) tank
6. After-treatment Control Module (ACM)

Notes

All Rights Reserved

Exhaust and Aftertreatment DPF with Horizontal SCR Catalyst and Heater

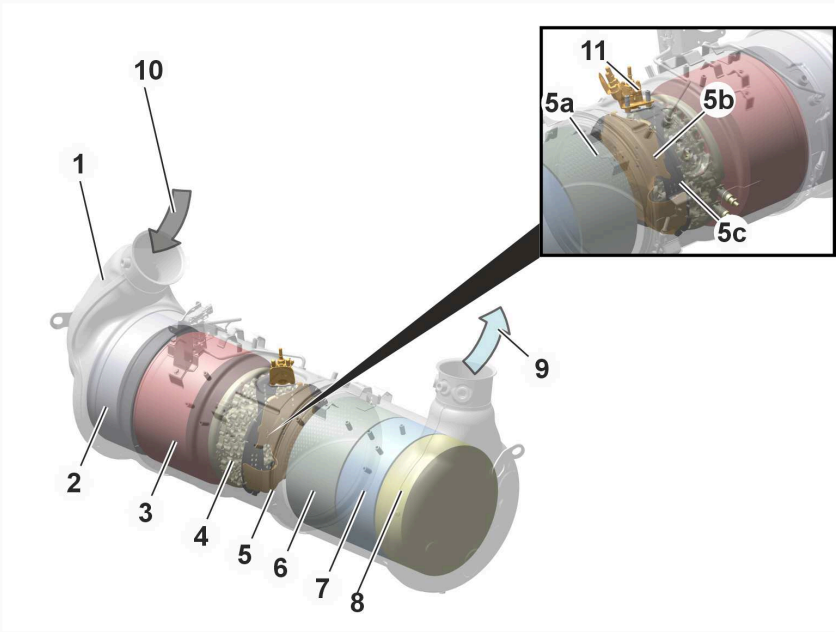

T2214198

1. Silencer
2. Aftertreatment Diesel Oxidation Catalyst (DOC)
3. Aftertreatment Diesel Particulate Filter (DPF)
4. 48 V e-Heater
5. Reagent (Diesel Exhaust Fluid) mixing chamber

5a. Perforated plate

5b. Reagent (Diesel Exhaust Fluid) mixing chamber plate (rear)

5c. Reagent (Diesel Exhaust Fluid) mixing chamber plate (front)

6. Selective Catalytic Reduction (SCR)
7. Ammonia Slip Catalyst (ASC)
8. Selective Catalytic Reduction (SCR)
9. Exhaust outlet
10. Exhaust inlet
11. Reagent (Diesel Exhaust Fluid) dosage valve

All Rights Reserved

Exhaust and Aftertreatment System Overview

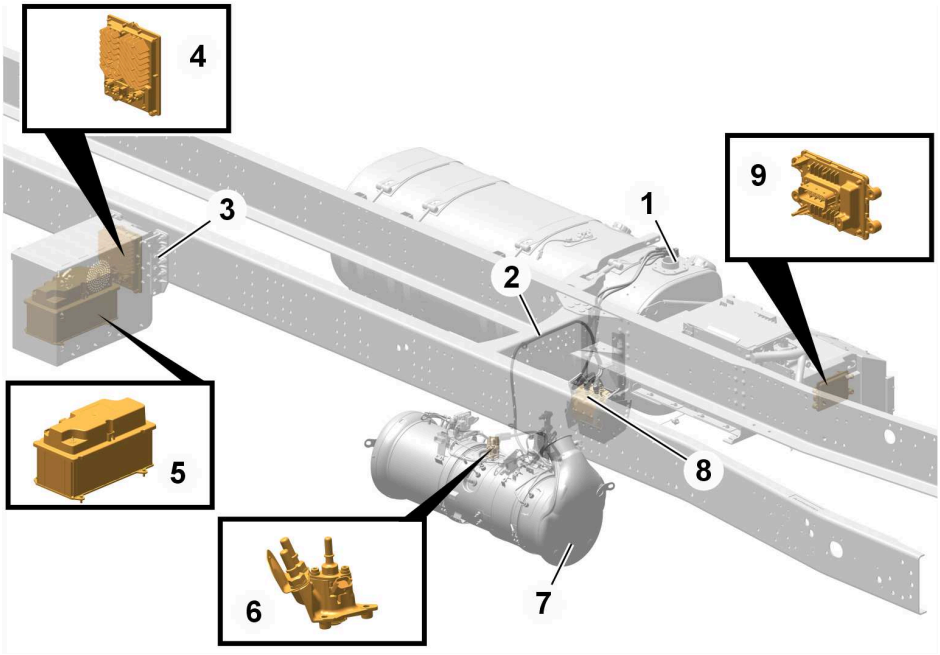

T2215998

1. Reagent (Diesel Exhaust Fluid) tank
2. Reagent (Diesel Exhaust Fluid) line
3. 48 V Battery Box
4. 48 V BMS (Battery Management System)
5. 48 V battery
6. Reagent (Diesel Exhaust Fluid) dosage valve
7. Silencer
8. Reagent (Diesel Exhaust Fluid) pump unit
9. After-treatment Control Module (ACM)

Notes

All Rights Reserved

Exhaust Aftertreatment System

⚠ DANGER

The DPF/SCR shield must not be removed while the vehicle is in use. Also, only remove the shield once the vehicle is out of use and the DPF/SCR is sufficiently cooled. Failure to follow these instructions can result in fire, which can cause component damage, personal injury or death.

⚠ CAUTION

Risk of component damage
The Diesel Particulate Filters (DPF), Selective Catalytic Reduction unit (SCR) and their components, **cannot** be moved or altered from the OEM installation in any fashion. Any alterations may cause component damage and is prohibited by the law.

The DPF, SCR and their components are the part of the overall vehicle emissions control system. In normal operation, these components can experience surface temperatures as high as 350° C (662° F). It is important to verify the temperature at which the material or substance in, or associated with, the body can ignite. If it is possible for the material or substance to fall or leak from the body, take steps to prevent them from contacting or collecting on the DPF or SCR. Failure to do so may result in fire.

It is important to note that additional shielding may, depending upon conditions and the material or substance, trap flammable substances between the additional shield and the DPF/SCR. If this condition can develop, advise the user of the vehicle to periodically check to ensure there are no trapped substances.

Note: The DPF/SCR and associated components are part of a U.S. EPA and California Air Resources Board (CARB) certified engine emissions system. These components must not be moved, altered or modified in any way. Tampering with these systems renders the emissions warranty void and may result in possible tampering charges by the EPA or CARB.

New stringent standards for exhaust emission control begin with the US 2010 engine model year. The Diesel Particulate Filter (DPF) system has been developed to act in combination with ultra low sulfur diesel (ULSD) fuel to reduce particulate emissions to meet the requirement. The Exhaust After-Treatment System (EATS) includes all the engine and exhaust emissions control components that are required to meet the stringent US 2010/GHG 2017 standard.

Particulate matter consists of soot and ash in the exhaust that engines with an EGR system alone, are not equipped to handle. The particulate matter is considered a contaminant that contains undesirable elements. The DPF system reduces the unwanted elements to a more acceptable level defined in the regulations. There are multiple methods of reducing these emissions. Volvo has selected to use a Diesel Oxidation Catalyst (DOC) with a catalyzed diesel particulate filter. The other uses a diesel particulate filter of a different kind without a DOC and in its place uses a combustion chamber to heat the exhaust mixture thus causing active regeneration.

The particulate matter removed from the exhaust collects on the filter surfaces. To avoid eventual blockage, which would increase exhaust back pressure and affect power and fuel economy, the filter must be cleaned. The DPF is cleaned automatically. The soot breaks down to safer substances before being released to the atmosphere. Some of the ash remains, but takes a long time to reach the point where ash clogs the filter.

Cleaning a filter so it can continue to function is called “regeneration.” Depending on vehicle usage, the engine utilizes a passive or parked regeneration system. Either system uses high heat to break down the chemical properties.

In “passive regeneration,” the exhaust produces enough heat continuously to convert the soot, with approximately 260 °C (500 °F) being required. The process is slow and continues indefinitely. Passive regeneration is possible only in vehicle applications where the temperature is likely to remain at or above the required temperature level, making active regeneration unnecessary.

All Rights Reserved

Parked regeneration is initiated manually by the driver when alerted by the dash. The vehicle must be stationary to begin the regeneration, and remain stationary to complete.

The aftertreatment DPF regeneration system is self-monitoring. Under certain duty cycles driver action is needed to perform a parked regeneration. When driver action is needed to perform a parked regeneration the aftertreatment DPF regeneration needed icon on the instrument cluster flashes and the message “Parked REGEN Needed” is displayed. Initiate a parked aftertreatment DPF regeneration at the next stop.

WARNING

Risk of personal injury
Before working on the exhaust, allow time for the entire exhaust system to cool. Failure to do so may result in personal injury. Severe burns can occur.

DPF Systems and Temperatures

The Volvo systems chemically alters soot by high heat into a harmless gas which passes out through the stack pipe. At these high temperatures, the process is relatively rapid (10–12 minutes). Eventually, the filter must be removed with special equipment to clean the ash.

Volvo offers a compact DPF unit with muffler. The compact unit is attached to the right frame rail, under the cab.

The DPF-muffler has an integrated heat insulation that covers most areas of the muffler. The DPF mufflers are not insulated at the V-clamp body connections, inlet and outlet pipes.

The following surface temperatures are measured with the muffler which is freely positioned in a room temperature environment with no forced cooling or wind (only self convection).

Note: The below values are **not** maximum temperatures. The surface temperature in a certain vehicle installations is dependent on the degree of encapsulation and the airflow around the muffler.

Compact DPF Temperatures

Position	Thickness of Heat Insulation	at exhaust temperature of 350 °C (662 °F) at the DPF-muffler inlet (no regeneration)	at exhaust temperature 450 ° C (842 °F) at the DPF-muffler inlet (no regeneration)
Inlet section — top	10 mm (0.4 in.)	170 °C (338 °F)	190 °C (374 °F)
Inlet section — side	No insulation	260 °C (550 °F)	320 °C (608 °F)
DOC section	9 mm (0.35 in.)	175 °C (347 °F)	215 °C (419 °F)
DPF section	10.5 mm (0.41 in.)	145 °C (293 °F)	190 °C (374 °F)
Outlet section — side	4.5 mm (0.18 in.)	100 °C (212 °F)	150 °C (302 °F)
Outlet section — bottom	4.5 mm (0.18 in.)	120 °C (248 °F)	170 °C (338 °F)
Clamping area — side	No insulation	230 °C (446 °F)	300 °C (572 °F)

All Rights Reserved

These 2017 GHG Integrated DPF/SCR surface temperatures were measured from a test vehicle in a controlled environment and are meant to be used as guidelines for mounting additional Customer equipment. These temperatures could vary based on the application and operating environment of your specific vehicle.

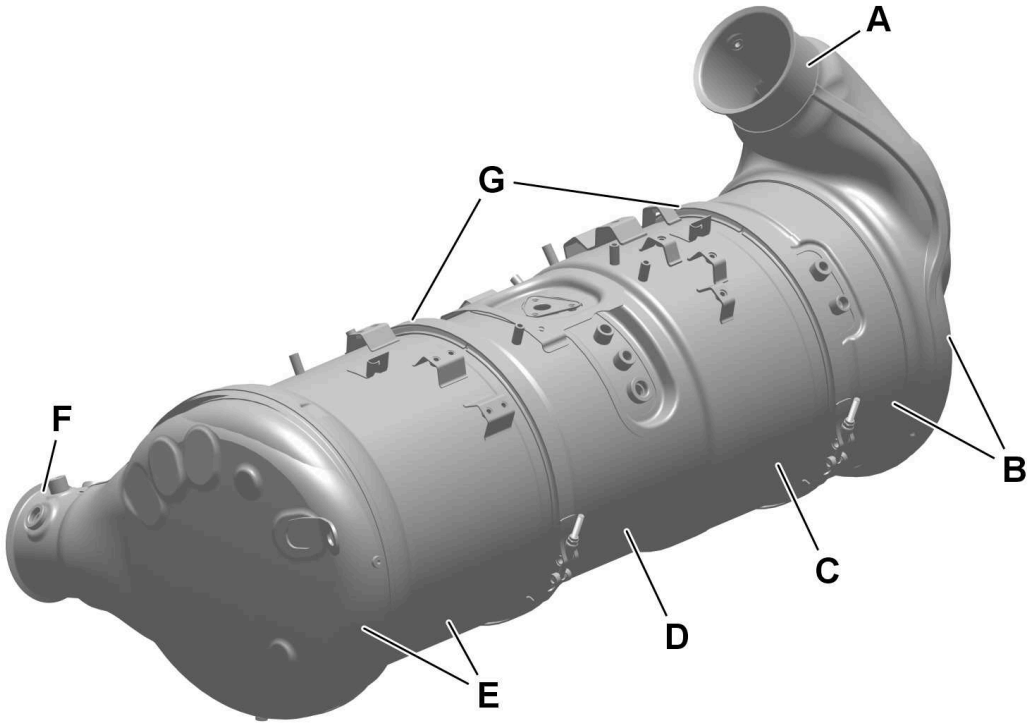

T2201507

Eats Surface Temperatures

Surface	Description	Max Surface Temperature at 500 °C (932 °F) exhausts	Max Surface Temperature at 625 °C (1157 °F) exhausts
A	Inlet pipe	275 (527)	325 (617)
B	DOC section	210 (410)	250 (482)
C	DPF section	200 (392)	200 (392)
D	Mixer section	200 (392)	200 (392)
E	SCR section	230 (446)	290 (554)
F	Outlet pipe	375 (707)	425 (797)
G	Clamping area	275 (527)	335 (635)

All Rights Reserved

Selective Catalytic Reduction (SCR)

Selective Catalytic Reduction (SCR) is an emissions-reduction technology with the ability to deliver near-zero emissions of nitrogen oxides (NOx), a smog-causing pollutant and greenhouse gas. SCR's performance is proved in millions of miles of real-world truck operations in other countries, as well as in long-term field tests in the U.S. The SCR reduces NOx emissions to very low levels, at the same time delivering excellent fuel economy and reliability. The system does not change the design or operation of the basic engine. Rather, The SCR is an aftertreatment system which converts NOx in the exhaust stream into harmless gases. Modern diesels already use exhaust aftertreatment systems, called diesel particulate filters, to control emissions of another pollutant, soot (also known as particulate matter or PM). The SCR works by injecting Diesel Exhaust Fluid (DEF) into the exhaust steam, after the DPF. The DEF is a safe, simple solution of water and urea. The DEF works with the heat of the exhaust and a catalyst to convert NOx into nitrogen and water vapor - two harmless and natural components of the air we breathe. The end result is cleaner air, excellent fuel efficiency and a reliable emissions control system for today's modern diesel engine.

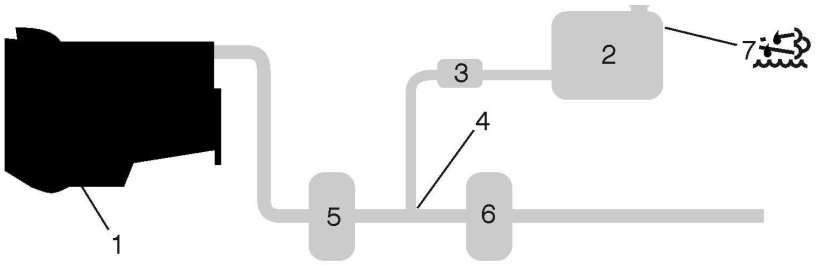

W2031651

System operation

1. Diesel engine optimized for high performance, low particle emissions and low fuel consumption.
2. Aftertreatment DEF Tank.
3. The aftertreatment control module continuously monitors and adjusts the DEF dosing rate.
4. DEF is injected into the exhaust gases in between the aftertreatment DPF (5) and the SCR catalyst (6).
5. Aftertreatment Diesel Particulate Filter (DPF).
6. In the SCR catalyst, nitrogen oxides are transformed into harmless nitrogen gas and water.
7. Aftertreatment DEF Tank Gauge.

All Rights Reserved

CAUTION

Risk of personal injury
Do not put diesel fuel in the Aftertreatment DEF tank. Diesel fuel, if sprayed into the hot exhaust along with the DEF, could ignite explosively causing a fire resulting in personal injury or damage to the exhaust system.



W3036787

Notes

All Rights Reserved

Diesel Exhaust Fluid (DEF)

DEF is a key reactant to the SCR process. It's a non-toxic, ultra-pure solution of urea and ultra-pure water. Urea is a compound of nitrogen that turns to ammonia when heated. The fluid is non-flammable and is not dangerous when handled as recommended. However, it is highly corrosive to certain metals, especially copper and brass. Read the separate section concerning the handling of DEF solution. Use only DEF that is clearly labeled as meeting ISO-22241 standards, and certified by the American Petroleum Institute (API). The container must display the API certification seal. Never use agricultural or industrial grade urea. Use of fluids other than API certified DEF will compromise aftertreatment system performance, increase emissions and may impact your product warranties. Never dilute DEF with water or any other fluid. It is recommended not to store DEF in extreme hot or cold conditions or for prolonged periods. Follow the instructions for proper storage and handling as indicated on the container or provided with the purchase.

Note: Agriculture mixtures are not pure enough for use in the SCR system and impurities in the solution will compromise the SCR system.

Diesel Exhaust Fluid (DEF) Handling

When handling DEF solution, it is important that electrical connectors to be connected or well encapsulated. Otherwise there is a risk that the DEF will cause oxidation that cannot be removed. Water or compressed air does not help, since DEF quickly oxidizes metal. If a connector comes into contact with the DEF solution, it must be replaced immediately to prevent the DEF solution from creeping further into the copper wiring, which takes place at a speed of about 60 cm (2.4 in) per hour.

⚠ CAUTION

Risk of component damage
When detaching hoses and components, do not spill DEF on disconnected connectors. If DEF is spilled on a connector, the connector must be replaced immediately.

Things to know about spilled Diesel Exhaust Fluid (DEF)

If DEF solution comes into contact with the skin, rinse with plenty of water and remove contaminated clothing.
If DEF solution comes into contact with the eyes rinse for several minutes and call for medical help if necessary.
If inhaled breathe fresh air and call for medical help if necessary.
Do not allow the DEF solution to come into contact with other chemicals.
The DEF solution is not flammable. If the DEF solution is exposed to high temperatures for long periods of time, it breaks down into ammonia and carbon dioxide.
The DEF solution is corrosive to certain metals, including copper and aluminium. This is similar to the corrosion caused by salt water.
If the DEF solution is spilled onto the vehicle, wipe off the excess and rinse with water. Spilled DEF solution can form concentrated white crystals on the vehicle. Rinse off these crystals with water.

Note: Do not flush DEF spills into the normal drain system.

⚠ WARNING

Risk of personal injury
DEF split onto hot components will quickly vaporize. Turn your face away!

All Rights Reserved

Diesel Exhaust Fluid (DEF) Consumption

DEF consumption is related to fuel consumption. A highway truck may travel 225–300 miles or more on one gallon of DEF. A gauge much like a fuel gauge will indicate the level of DEF in the tank. A DEF low-level warning activates when DEF is low. If a driver runs out of DEF completely, vehicle power will be reduced to derate mode. When the DEF tank is refilled, the engine will resume normal power.

Note: DEF tanks are sized for a two to one fuel to DEF ratio in order to meet US 2010 requirements.

Diesel Exhaust Fluid (DEF) Availability

DEF is available in 2.5 gallon containers, 55 gallon drums, 275 gallon IBC and in bulk storage for fleet locations, truck stops and dealerships. All major truck stops, dealers and distributors carry DEF. For more information on DEF and availability visit the website www.Volvoscr.com.

Aftertreatment Control Module (ACM)

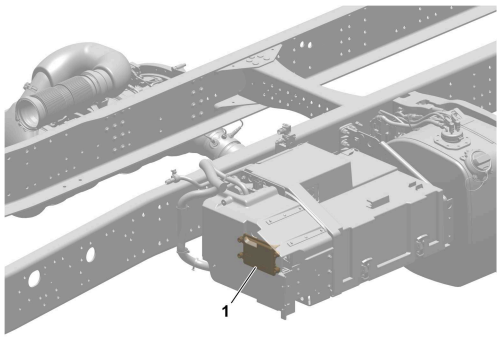

T3197929

1. Aftertreatment Control Module (ACM)

The ACM controls the following components in the exhaust aftertreatment system:

- Aftertreatment DEF Dosing Unit
- Aftertreatment DEF Pump
- Aftertreatment DEF Tank Heater Valve
- Aftertreatment DEF Return Valve
- Aftertreatment DEF Line Heaters
- Aftertreatment DEF Tank Level Sensor

The ACM also monitors the following values in the exhaust aftertreatment system:

- Aftertreatment DEF Dosing Absolute Pressure
- Aftertreatment DPF Inlet/Outlet Temperature
- Aftertreatment DEF Tank Temperature
- Aftertreatment DPF Differential Pressure
- Aftertreatment DEF Tank Level
- NOx Sensors

The ACM is a standalone module. Depending on your configuration, it may be mounted as part of the DEF tank (as shown above) or on a bracket near the DEF tank.

Heat Protection

Factory installed heat protection must not be removed from any Volvo vehicles.

All Rights Reserved

Fuel heating option

The following illustrations and part number charts show the locations of the coolant supply and return connections, along with the part numbers for the stub pipes, sealing rings and necessary hardware to install coolant hoses for fuel heating.

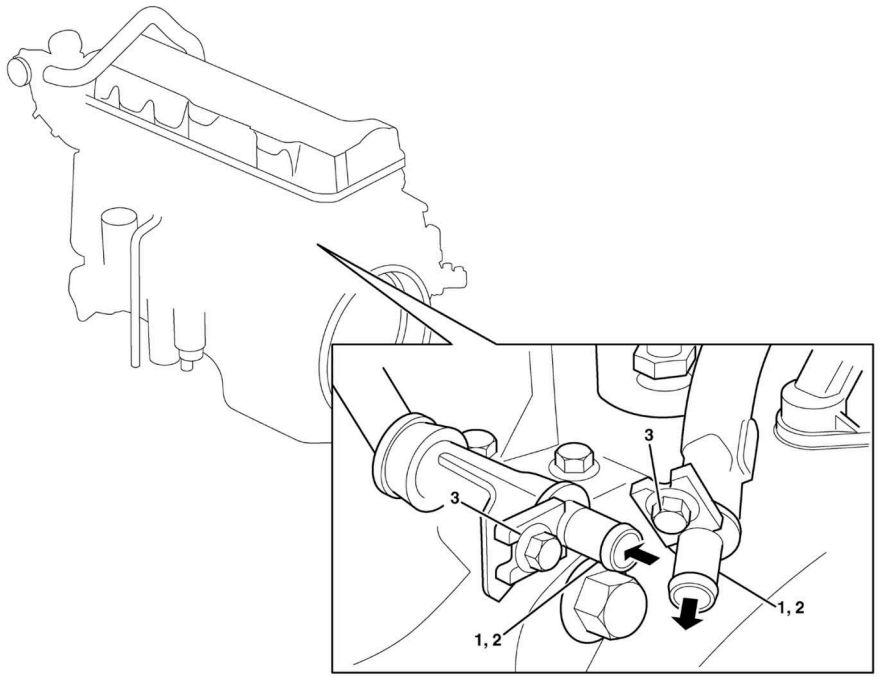

Figure 1 — Cooling System Supply and Return Connections — D13 Engines

Key	Qty.	Part No.	Description
1	2	21087921	Pipe, stub assembly, coolant supply and return (arrows in illustration above indicate direction of coolant flow)
2	2	20566808	Ring, sealing
3	2	946173	Flange screw, M8 x 1.25 - 20 mm long

Note: Models equipped with a fuel heater and engine coolant are used to heat the fuel. These connections provide the flow of coolant to the fuel heater and cannot be used for in-transit heat.

All Rights Reserved

Available Fittings for Specific Applications

Note: Contact your local Volvo dealer to order these fittings.

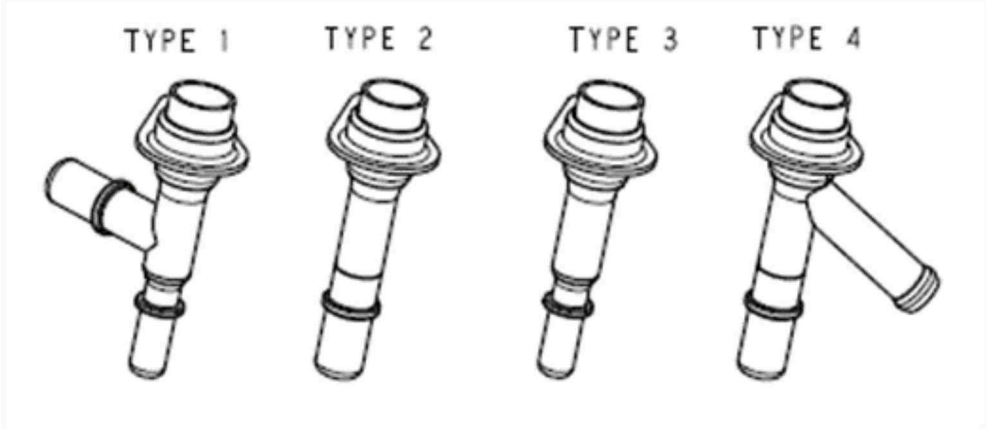

T2195650

Type	Part No.
1	23409236
2	23409234
3	23409238
4	23409240

Notes

All Rights Reserved

NOx Sensor



T2197926

The NOx sensor is used to monitor the emission reduction system. Two NOx sensors are needed for US 2010/GHG 2017 vehicles. One sensor is positioned before SCR, the other one is on the exhaust pipe after the SCR-muffler outlet (horizontal version).

Note: The NOx sensors must not be moved or modified in anyway. To do so would inhibit the proper operation of the after-treatment system.

Notes

All Rights Reserved

Engine Operation

Engine Overspeed

This vehicle is equipped with a diesel engine and must not be operated in an area with a concentration of hydrocarbon vapors (for example, gasoline or diesel fuel fumes). Be cautious of low-lying or enclosed areas. The vapors may be drawn into the engine through the air intake and cause the engine to overspeed. Hot carbon and other sparks may come from the exhaust system, and cause an explosion and fire.

If the vehicle is in an area where hydrocarbon vapors may be present, shut the engine off immediately if any abnormalities are experienced. DO NOT leave it unattended.

⚠ DANGER

The diesel engine will operate on any fuel which enters the cylinder, whether it is from the injectors or from the air intake system. Therefore, if any solvent is used to flush out the air cleaner element, the engine may overspeed during start-up. Engine damage and serious personal injury or death from burns or explosion can occur.

⚠ DANGER

DO NOT use ether or similar starting aids in a Volvo or any other engine with a preheater. The Volvo engine is equipped with a preheater. Introduction of ether or other combustible material in the intake manifold could cause a fire or explosion, serious personal injury or death.

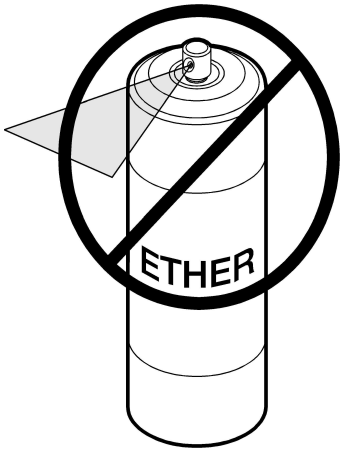

W0001484

All Rights Reserved

Fittings, Fuel Line, Replacement

This information covers the proper procedure for replacing the Voss fuel line fittings.

Note: Information is subject to change without notice. Illustrations are used for reference only, and may differ slightly from the actual engine version. However, key components addressed in this information are represented as accurately as possible.

Special Tools

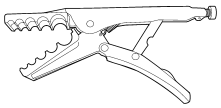

W2006113

85111500
Voss Pliers

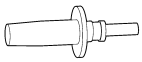

W2006115

85111501
Voss Straight Drift

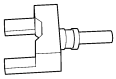

W2006116

85111502
Voss Elbow Drift

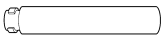

W2006114

85111503
Voss Handle

Fittings

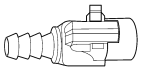

W2006109

20395030
Straight 16 mm Fitting

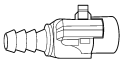

W2006110

20395028
Straight 12.5 mm Fitting

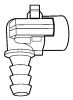

W2006111

20395034
90 degree 12.5 mm Fitting

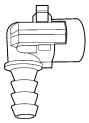

W2006112

20395036
90 degree 16 mm Fitting

All Rights Reserved

Replacement

1. After determining which molded Nylon end needs to be replaced, cut the nylon tubing off just behind the barb.

   Note: Make a nice clean, square cut.

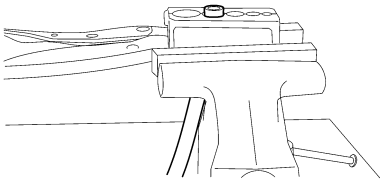

W2006149

2. Clamp the tubing in the jaws, special tool number 85111500, and carefully insert the Nylon end in by using a soft tipped hammer or a small arbor or drill press.

   Note: To press in the new end, the Nylon tubing must be held in the special serrated jaws.

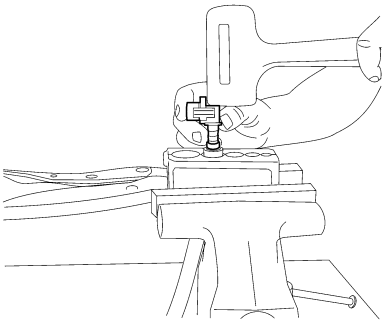

W2006150

3. The Nylon end can be pressed in with a small arbor press or a small hammer if used carefully. The Nylon tubing must stick out of the pliers about 1/4 inch.

   Note: For ease of assembly, small hand tools as shown are available.

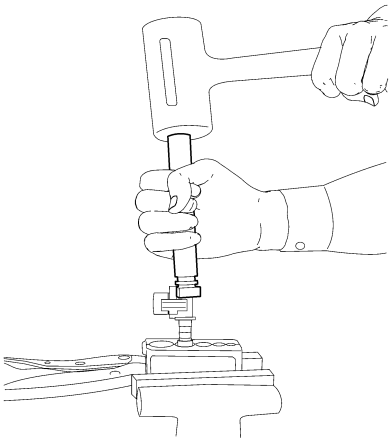

W2006151

4. The Nylon must be pressed down into the Nylon tubing so that all barbs are fully inserted. Care must be taken to keep all parts clean.
5. The Nylon tube need not be heated for assembly.

All Rights Reserved

6. The tube end must be free of grease or lubricants.

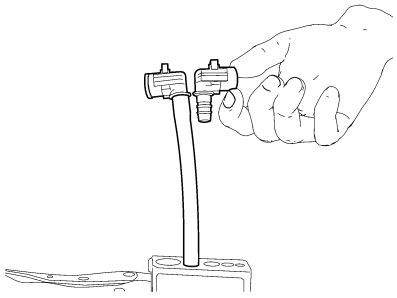

W2006152

7. Care must be taken to not damage the tubing by excessive clamp force.
8. Make sure the proper sized end is used for the selected Nylon tubing.

Notes

All Rights Reserved

All Rights Reserved

English 6.2025, 18690314

VOLVO

Volvo Trucks North America
http://www.volvotrucks.com